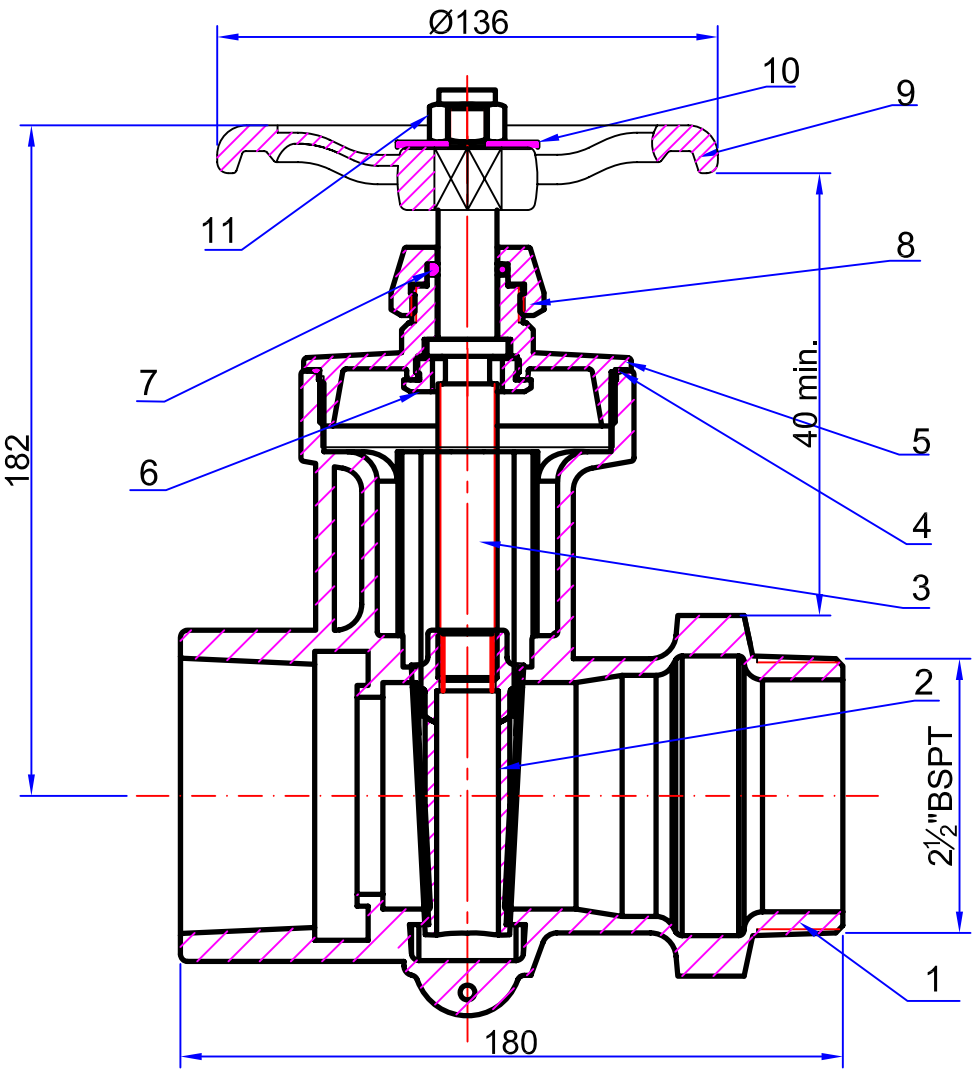


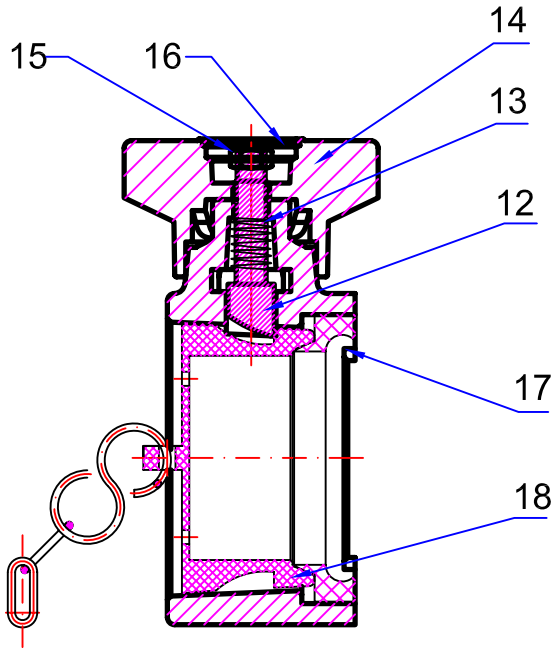


| No. | Drawing No. | Name | Q'TY | Material | Weight | Remark |
|---|---|---|---|---|---|---|
| 18 | DLV03-042A-03 | Cap with chain | | Assembly | | Red |
| 17 | DLJ01-007-07 | Sealing ring | 1 | Rubber | | |
| 16 | DLV03-037-10 | Cap | 1 | Plastic | | |
| 15 | GB/T 889.1-2000 | Nut M8 | 1 | Steel | | Galvanized |
| 14 | DLV03-040-08 | Guard knob | 1 | Brass | | |
| 13 | DLJ01-007-04 | Spring | 1 | SUS304 | | |
| 12 | DLV03-037-09 | Tag | 1 | Brass | | |
| 11 | GB/T 889.1-2000 | Nut M12 | 1 | Steel | | Galvanized |
| 10 | GB/T 97.1-2002 | Hand wheel gasket | 1 | Steel | | Galvanized |
| 9 | DLV03-042A-02 | Handwheel | 1 | Brass | | Red |
| 8 | DLV03-040-06 | Nut | 1 | Brass | | |
| 7 | GB/T 1235-76 | Valve stem O-ring | 1 | Rubber | | Ø22×Ø3 |
| 6 | DLV03-040-05 | Nut | 1 | Brass | | |
| 5 | DLV03-040-04 | Valve cap | 1 | Brass | | Ø80×Ø2 |
| 4 | GB/T 1235-76 | Valve cap O-ring | 1 | Rubber | | |
| 3 | DLV03-040-03 | Stem | 1 | Brass | | |
| 2 | DLV03-040-02 | Disc | 1 | Brass | | |
| 1 | DLV03-042A-01 | Dody | 1 | LG2 | | |

Technical Requirements:

1.To assemble the components per required, and to check if all components are correctly fixed;

2.Handwheel and guard knob can be flexibly rotated; The closing direction of valve shall be marked on handwheel;

3. The complete turns of handwheel to fully open a closed valve shall be 8 to 10turns;

4. The inlet thread shall be per standard BS21;

5. After assembled, the sealing test(under pressure of 16.5bar and kept for 2 minutes) and pressure test(under pressure of 22 bar and kept for 2 minutes), no leakage and damage that affect normal operation shall be caused.

| | | | | | |
|---|---|---|---|---|---|
| Zone | Revision note | Date | Signature | 2.5"BSPT(Male) Gate Valve | Code No. HV006 |
| Drawn | | Audit | | Assembly | W.T. 5.7Kg / Scale |
| Checked | | Approved | | | Hydrotech |